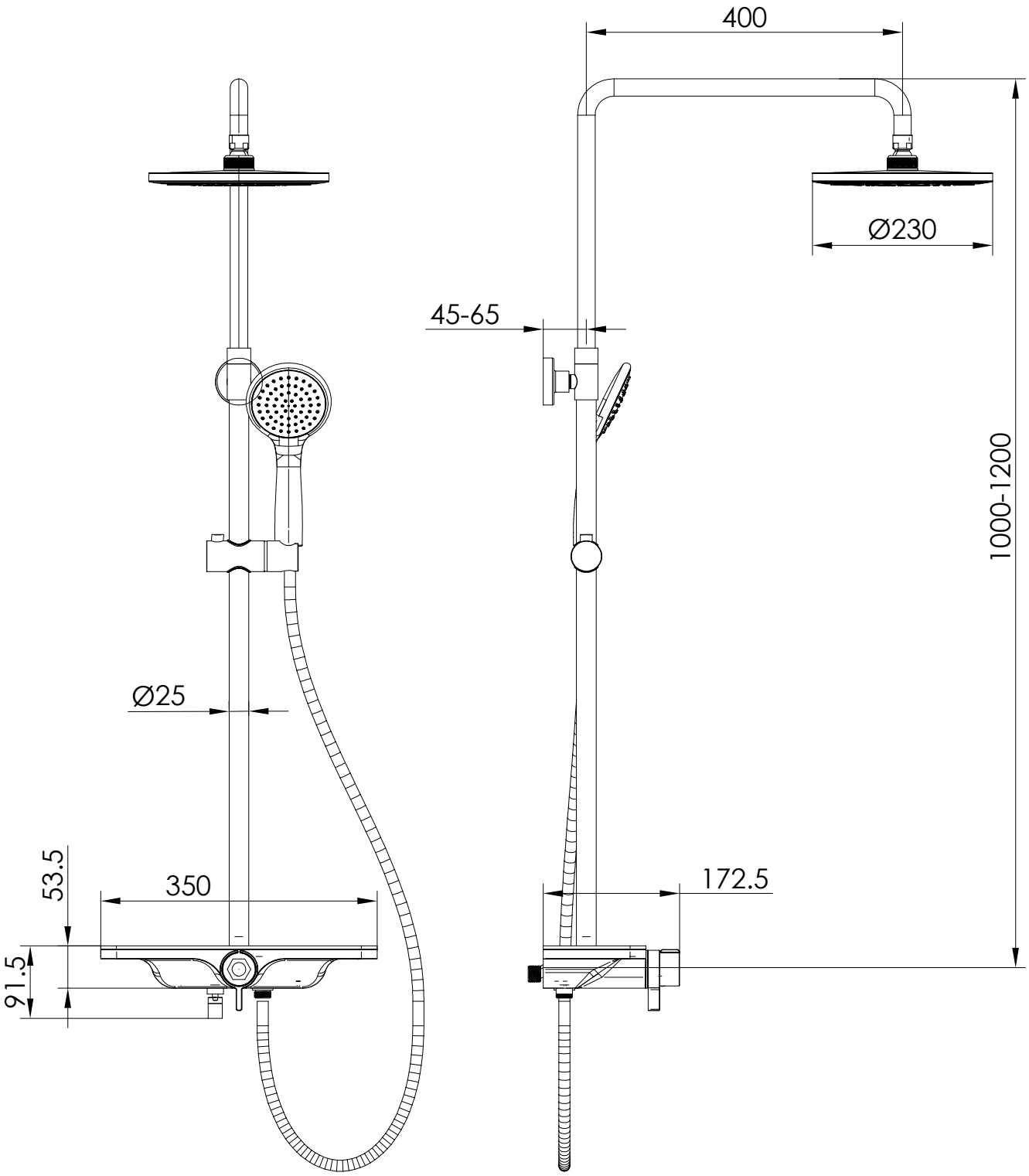

					GLLON 健隆 SINCE 1989 ZHEJIANG JIANLONG SANITARY CO.,LTD.		
NO.	QTY	Description	Signature	Date	DIMENSIONAL DRAWING		
DESIGN				Version			
CHECK				1.0	SIZE A4	DRAWING No.	PRODUCT No.
APPROVE					SCALE		SF3030