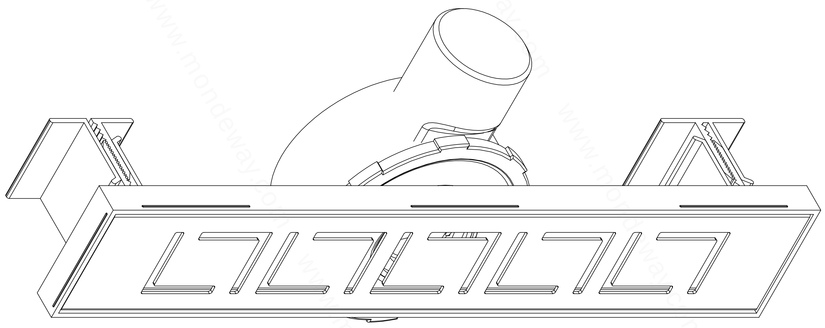

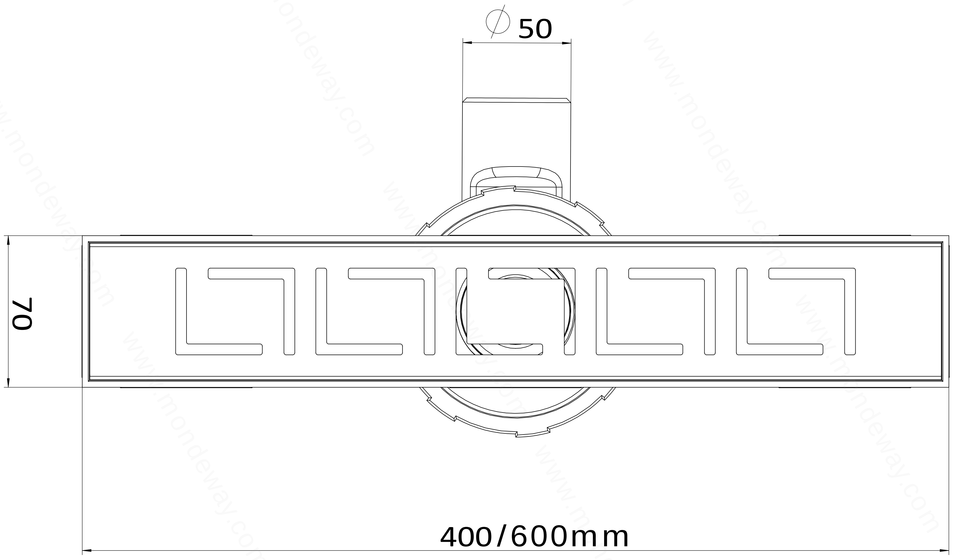

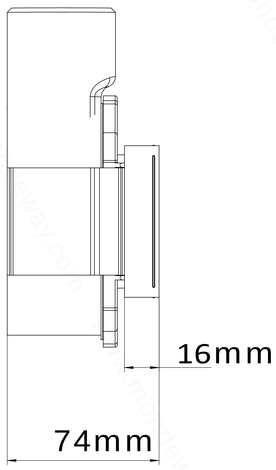

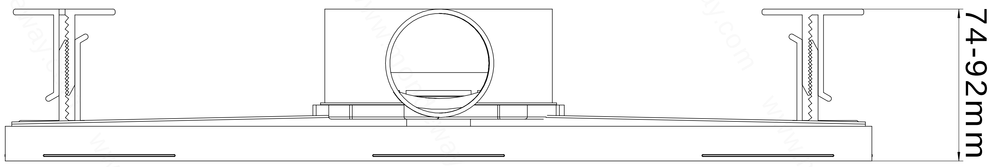

www.mondeway.com